SUL 189 s | Article number: 1890801

Description

- Analogue time switch
- 1 channel
- With power reserve (NiMH rechargeable battery)
- Quartz controlled
- Daily program
- 96 switching segments
- Shortest switching time: 15 minutes
- Clock hands for time display
- Switching preselection
- Permanent ON/OFF switch
- Switching status display
- Simple summer/winter time correction
  - Time can be changed clockwise or anti-clockwise

Technical data

Operating voltage	230 V AC
Frequency	50 – 60 Hz
Number of channels	1
Installation type	Front panel installation/wall installation
Type of connection	Screw terminals
Drive	Quartz-controlled stepper motor
Program	Daily program
Power reserve	3 days full power reserve approx. 3 days after connection to operating voltage
Switching capacity at 250 V AC, cos φ = 1	10 A
Switching capacity at 250 V AC, cos φ = 0,6	2 A
Shortest switching times	15 min
Programmable every	15 min
Time accuracy at 25 °C	≤ ± 1 s/day (quartz)
Type of contact	Changeover contact
Switching output	Potential-free and phase-independent
Number of switching segments	96
Stand-by consumption	0,5 W
Test approval	EMV
Housing and insulation material	High-temperature resistant, self-extinguishing thermoplastic
Type of protection	IP 20
Protection class	II according to EN 60 730-1
Ambient temperature	-10 °C … +55 °C

Connection example

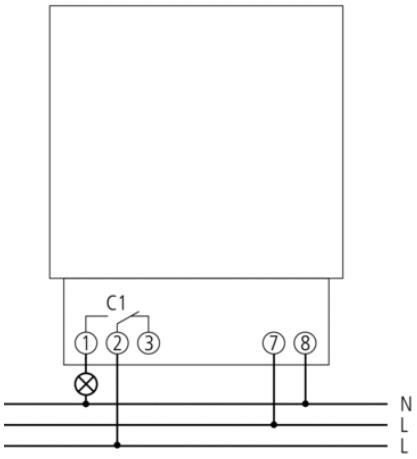

Scale drawings

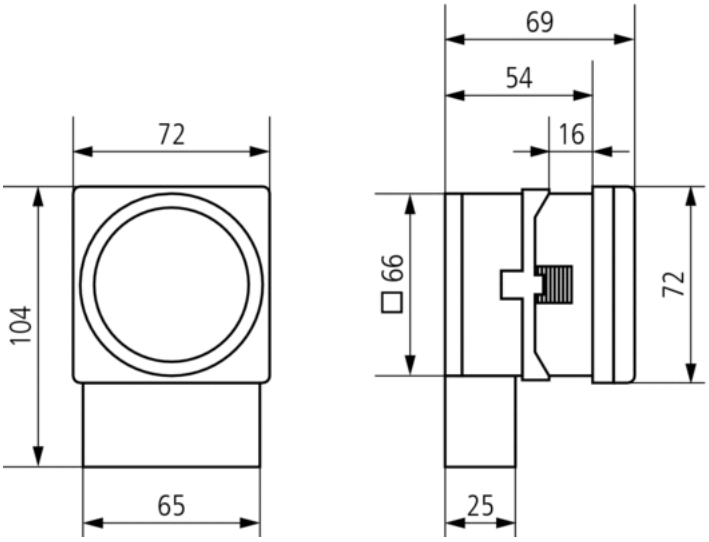

Accessories

Snap-on mounting 72 x 72

- Article number: 9070071
  Details ▸ www.theben.de