TP-LINK®

User Guide

TL-SF1005D
TL-SF1008D
TL-SF1016D

10/100Mbps Desktop Switch

EAC

REV 3.0.1
7106504531

FCC STATEMENT

This device complies with part 15 of the FCC Rules. Operation is subject to the following two conditions:

1) This device may not cause harmful interference.
2) This device must accept any interference received, including interference that may cause undesired operation.

Any changes or modifications not expressly approved by the party responsible for compliance could void the user's authority to operate the equipment.

CE Mark Warning

This is a class B product. In a domestic environment, this product may cause radio interference, in which case the user may be required to take adequate measures.

Package Contents

The following items should be found in your box:

- One TL-SF1005D/TL-SF1008D/TL-SF1016D Switch
- One Power Adapter
- This User Guide

Note:

The wall-mounting screws are not provided. Please contact your distributor if any of the listed items are damaged or missing.

The Switch mentioned in this User Guide stands for TL-SF1005D/TL-SF1008D/TL-SF1016D 10/100Mbps Desktop Switch without any explanation. For Simplicity, we will take TL-SF1016D for example throughout this Guide.

TL-SF1016D can be mounted on a wall.

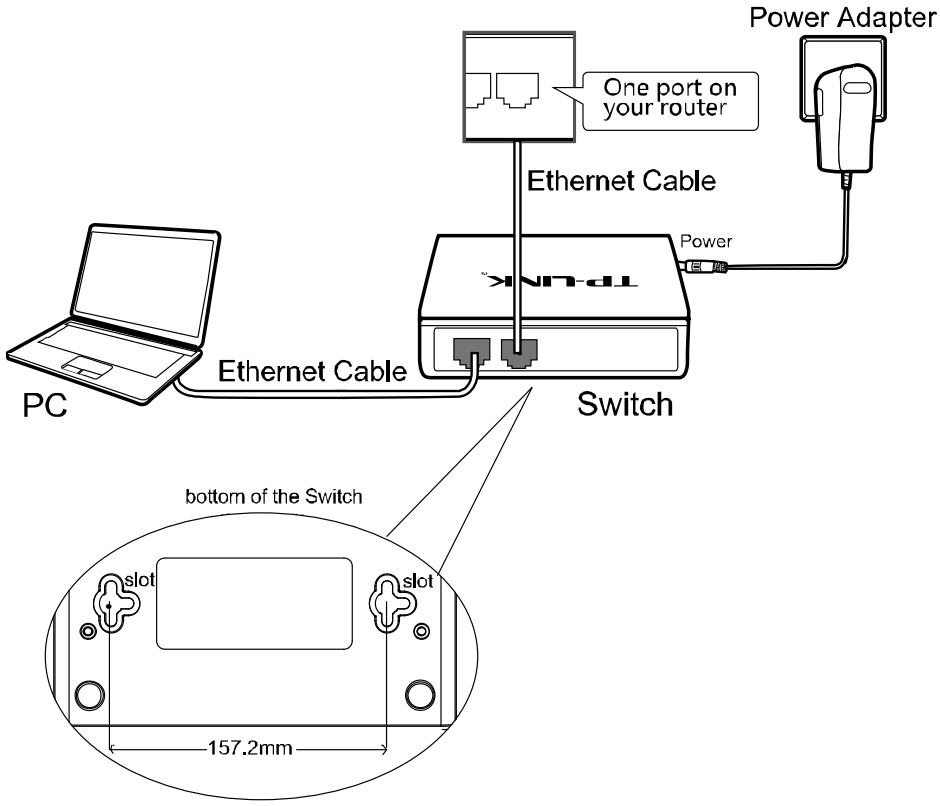

Refer to the steps below to mount the Switch on a Wall.

1. Drill two holes into the wall. Insert a screw into each hole and leave a part of its head exposed.
2. Place the two wall-mounting slots over the screws and slide the Switch down to fasten it.

Note: Without slots on the bottom, TL-SF1005D or TL-SF1008D cannot be mounted on a wall.

The Switch's LEDs are located on the front panel:

LED	Status	Indication
Power	On	The switch is powered on.
	Off	No Power Source. *Please check if the power cord is connected to the Switch properly, and make sure the power is ON.
Ethernet LED	On	The corresponding ethernet port is connected to a network device.
	Flashing	Data is being transmitted or received.
	Off	No device is connected to the corresponding port. *Please check if the cable connectors are firmly plugged into the switch and the device, and verify that the connected device is turned on and working well.

COPYRIGHT & TRADEMARKS

TP-LINK® is a registered trademark of TP-LINK TECHNOLOGIES CO., LTD. Other brands and product names are trademarks or registered trademarks of their respective holders.

Copyright © 2013 TP-LINK TECHNOLOGIES CO., LTD. All rights reserved.

http://www.tp-link.com